Please dispose of packaging for the product in a responsible manner. It is suitable for recycling. Help to protect the environment, take the packaging to the local amenity tip and place into the appropriate recycling bin.

Never dispose of electrical equipment or batteries in with your domestic waste. If your supplier offers a disposal facility please use it or alternatively use a recognised re-cycling agent. This will allow the recycling of raw materials and help protect the environment.

FOR HELP OR ADVISE ON THIS PRODUCT PLEASE CONTACT YOUR DISTRIBUTOR, OR SIP DIRECTLY ON:
TEL: 01509500400
EMAIL: sales@sip-group.com or technical@sip-group.com
www.sip-group.com

Ref: 110713

SIP INDUSTRIAL

machinery specialists since 1968

Medusa

T1101 Generator

03955

Please read and fully understand the instructions in this manual before operation. Keep this manual safe for future reference

Declaration of Conformity

We

SIP (Industrial Products) Ltd
Gelders Hall Road
Shepshed
Loughborough
Leicestershire
LE12 9NH
England

As the manufacturer's authorised representative within the EC
declare that the

Medusa T1101 Petrol Generator - SIP Part. No. 03955

Conforms to the requirements of the following directive(s), as indicated.

2006/95/EC	Low Voltage Directive
2006/42/EC	Machinery Directive
2004/108/EC	EMC Directive
97/68/EC As Amended By 2010/26/EU	Emissions From Non-road Mobile Machinery
2000/14/EC As Amended By 2005/88/EC	Noise Emission Directive
2002/95/EC	RoHS Directive

And the following harmonised standard(s)

EN 12601:2001
EN 55012:2007
EN 61000-6-3:2007
EN 61000-6-1:2007

Signed: ……...

Mr P. Ippaso - Managing Director - SIP (Industrial Products) Ltd
Date: 23/03/2010.

PARTS LIST….cont

Ref. No.	Description	SIP Part No.	Ref. No.	Description	SIP Part No.
59.	Carburettor gasket	PW01-00403	67.	Speed swinging rod	n/a
60.	Carburettor cushion block	n/a	68.	Speed swinging rod washer	n/a
61.	Carburettor	PW01-00404	69.	Clip	n/a
62.	Air cleaner gasket	PW01-00405	70.	Speed governing arm	PW01-00408
63.	Nut M6	n/a	71.	Speed governing spring	PW01-00409
64.	Breathing tube	n/a	72.	Throttle reset spring	PW01-00410
65.	Air cleaner assy	PW01-00406	73.	Speed governing pull rod	n/a
66.	Diode	PW01-00407			

CONTENTS

SAFETY SYMBOLS USED THROUGHOUT THIS MANUAL

Danger / Caution: Indicates risk of personal injury and/or the possibility of damage.

Warning: Risk of electrical injury or damage!

Hot Surfaces: Indicates risk of possible burning due to hot surfaces created during normal operation.

Note: Supplementary information.

Poisonous Fumes: Indicates a risk of possible inhalation of harmful fumes if care is not taken.

Flammable: Indicates possible risk of combustion if care is not taken.

SAFETY INSTRUCTIONS

IMPORTANT: Please read the following instructions carefully, **failure to do so could lead to serious personal injury and / or damage to the generator.**

- Before starting or servicing any generator, read and understand all instructions. Failure to follow safety precautions or instructions can cause equipment damage and/ or serious personal injury. Retain all manuals for future reference.
- Never use this generator for any application other than that specified by the manufacturer. Never operate this generator under conditions not approved by the manufacturer.
- Never attempt to modify this generator to perform in any manner not intended by the manufacturer.
- Use only products and parts recommended by the manufacturer For maintenance

PARTS LIST

Ref. No.	Description	SIP Part No.	Ref. No.	Description	SIP Part No.
1.	Bolt M6x25	n/a	30.	Pin 8x16	n/a
2.	Oil seal	PW01-00393	31.	Cylinder cover head gasket	n/a
3.	Oil dipstick	PW01-00394	32.	Outlet valve	n/a
4.	Crankcase cover	n/a	33.	Intel valve	n/a
5.	Pin 8x12	n/a	34.	Stud M8x55	n/a
6.	Crankcase cover gasket	PW01-00395	35.	Cylinder cover head	n/a
7.	Bearing 60000 17	n/a	36.	Valve spring	n/a
8.	Crankshaft	n/a	37.	Valve spring seat	n/a
9.	Cam shaft	n/a	38.	Bolt M8x50	n/a
10.	Connect rod assy	n/a	39.	Cylinder head cover gasket	n/a
11.	Piston pin circlip	n/a	40.	Cylinder head cover	n/a
12.	Piston pin	n/a	41.	Ignition coil plate	n/a
13.	Piston	n/a	42.	Bolt M6x12	n/a
14.	Piston ring set	n/a	43.	Oil baffle	n/a
15.	Speed governing push dish	n/a	44.	Flywheel assy	n/a
16.	Speed swinging rod washer	n/a	45.	Flywheel fan	n/a
17.	Retaining ring	n/a	46.	Starting flange	n/a
18.	Speed governing shaft	n/a	47.	Flywheel nut	n/a
19.	Speed governing gear	n/a	48.	Air cover	n/a
20.	Bearing 60000 17	n/a	49.	Air cover	n/a
21.	Bolt M6x16	n/a	50.	Wind hood	n/a
22.	Oil sensor assy	PW01-00396	51.	Rubber block	n/a
23.	Oil drain Bolt gaskets	PW01-00397	52.	Governor	n/a
24.	Oil drain bolt M10x15	PW01-00398	53.	Bolt M6x8	n/a
25.	Crank case	n/a	54.	Recoil starter	PW01-00400
26.	Valve tappet	n/a	55.	Ignition coil	PW01-00401
27.	Valve lifter	n/a	56.	Lead wind cover	n/a
28.	Valve rocket assy	n/a	57.	Spark plug	PW01-00402
29.	Bolt M6x18	n/a	58.	Studs M6x91	n/a

EXPLODED DRAWING

ENGINE

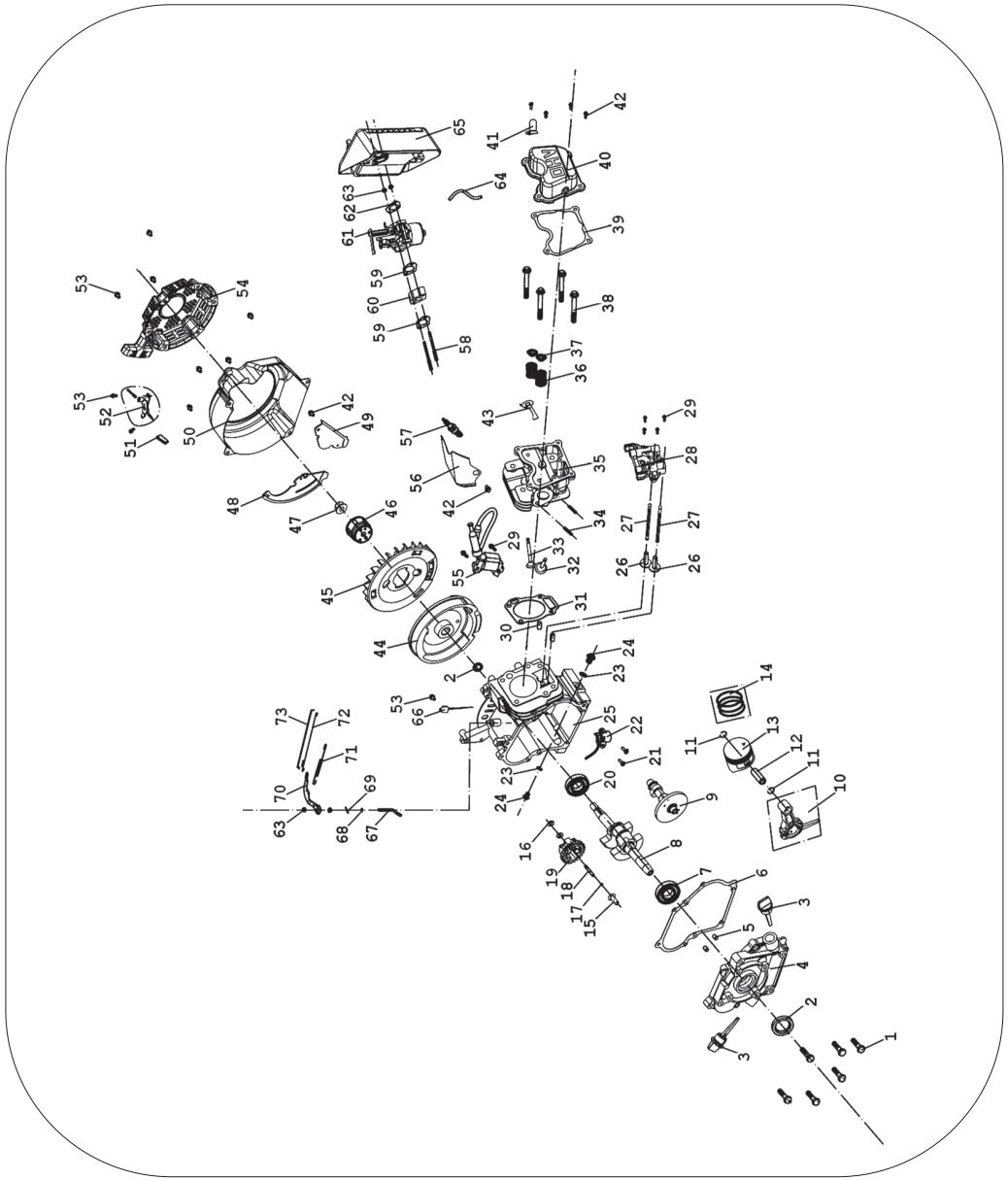

SAFETY INSTRUCTIONS….cont

and repairs.

- Be sure that the generator is properly grounded to an external ground path prior to operation. Refer to the section entitled " Grounding Instructions " for proper grounding procedures.
- Be sure that the generator is operated only by persons who have read and who understand these instructions.
- Be sure that the generator is placed on a flat level surface prior to and during operation. The generator must not slide or shift during operation.
- Keep all persons away from the generator during operation.
- Do not allow persons wearing loose clothing or jewellery to start or operate the generator. Loose clothing or jewellery may become entangled in moving components, causing equipment damage and/or personal injury.
- Be aware of moving parts and hot surfaces that occur during normal operation of this generator.
- Be sure all devices are switched off prior to connecting them to the generator.
- Be sure that all tools and appliances are in good working order and are correctly grounded.
- Never operate the generator with damaged, broken or missing parts, or with any guards or covers removed.
- Do not refill the fuel tank while the engine is running, or still hot.
- Be careful to prevent fuel spillage during refills.
- Be sure the fuel tank cap is securely in place before starting the engine.
- Allow engine to cool before refuelling, or servicing.
- Never refuel whilst smoking or in the vicinity of a naked flame.
- Take care not to spill any fuel on the engine, exhaust or any part of the generator.
- Should any fuel make contact with your clothes; change and wash them immediately.
- If any fuel makes contact with your skin wash with soap and water immediately.
- If you swallow any fuel, inhale any vapour or allow contact with your eyes, seek medical attention immediately.
- Be sure to store petrol in clean containers that do not contain water, dirt or rust because this will reduce the life of the engine; ensure that all local fuel storage laws are followed.
- Never operate this generator in an explosive atmosphere or near any flammable sources.
- Always operate this generator in a well ventilated area to reduce the risk of suffocation.
- Do not operate this generator on wet surfaces or in the rain.
- Do not operate the generator or any electrical items with wet hands.
- Never drag the generator with power cords or by any means to move it; only move the generator with the carrying handles.
- Never cover the generator or restrict the exhaust or air flow in any way.

SAFETY INSTRUCTIONS….cont

- Always ensure that the generator is at least 1m (3ft) away from any walls or buildings to allow correct air flow.
- Do not connect this generator to a commercial power supply.
- Do not connect this generator in parallel with any other generator.

Caution: anyone who operates this generator should read and fully understand all of the instructions and warnings in this manual.

Electric Shock: There is a very real risk of electric shock if this generator is not used in the correct manner. **NEVER** Use the generator or anything connected to it in wet conditions.

Hot Surfaces: During normal operation certain parts of this generator will become hot. **ALWAYS** stay alert and be aware of hot components / surfaces. Allow the engine to cool before attempting to move, clean or maintain the generator.

Poisonous Fumes: Exhaust fumes produced during normal operation are poisonous. **Do not** operate this generator in enclosed areas.

Flammable: The fuel used to run this generator (unleaded petrol) is highly flammable. Never re-fuel the generator whilst it is still running. Store unused fuel safely and away from children and in accordance with local regulations / laws.

Caution: Never attempt to connect the generator directly to the electrical system of any building / structure which is connected to the main grid.

Electrical current from the generator may "back feed" into the home's electrical system.
It could cause damage or fire to the building, the generator as well as anything connected to it.
Should a generator be required to be connected to any electrical system, it must be installed by a suitably qualified electrician who can warn you of any dangers that may occur.
Incorrectly installed generators can also cause personal injury. For example, if a power

PARTS LIST

Ref. No.	Description	SIP Part No.	Ref. No.	Description	SIP Part No.
1.	Engine	PW01-00280	23.	Control panel	PW01-00302
2.	Front end cover	PW01-00281	24.	Bolt M8X16	PW01-00303
3.	Rotor	PW01-00282	25.	Nut M8	PW01-00304
4.	Stator	PW01-00283	26.	Washer M8	PW01-00305
5.	Alternator guard	PW01-00284	27.	Spring washer M8	PW01-00306
6.	Rear end cover	PW01-00285	28.	Bolt M8X20	PW01-00307
7.	AVR	PW01-00286	29.	Spring washer 6	PW01-00308
8.	Carbon brush	PW01-00287	30.	Bolt M6X105	PW01-00309
9.	Rear end cover guard	PW01-00288	31.	Washer M8	PW01-00310
10.	Alternator anti-vibe	PW01-00289	32.	Bolt M8x180	PW01-00311
11.	Engine anti-vibe	PW01-00290	33.	Lock washer M5	PW01-00312
12.	Muffler gasket	PW01-00291	34.	Washer M5	PW01-00313
13.	Muffler	PW01-00292	35.	Spring washer M5	PW01-00314
14.	Fuel tank cap	PW01-00293	36.	Bolt M5X16	PW01-00315
15.	Fuel tank filter	PW01-00294	37.	Bolt M5X12	PW01-00316
16.	Fuel tank	PW01-00295	38.	Washer M8	PW01-00317
17.	Gasket	PW01-00296	39.	Bolt M6X12	PW01-00318
18.	Fuel switch	PW01-00297	40.	Nut M6	PW01-00319
19.	Frame	PW01-00298	41.	Washer 6	PW01-00320
20.	Muffler guard main	PW01-00299	42.	Lock washer 6	PW01-00321
21.	Muffler guard	PW01-00300	43.	Bolt M6x14	PW01-00322
22.	Earth wire	PW01-00301	44.	Screw ST4.2x12	PW01-00323

Control panel spares					
Ref. No.	Description	SIP Part No.	Ref. No.	Description	SIP Part No.
n/a	AC circuit breaker	PW01-00436	n/a	Voltmeter	PW01-00440
n/a	DC circuit breaker	PW01-00437	n/a	Green led light	PW01-00441
n/a	230v socket	PW01-00438	n/a	Engine switch	PW01-00442
n/a	12v socket	PW01-00439			

EXPLODED DRAWING

MAIN GENERATOR UNIT

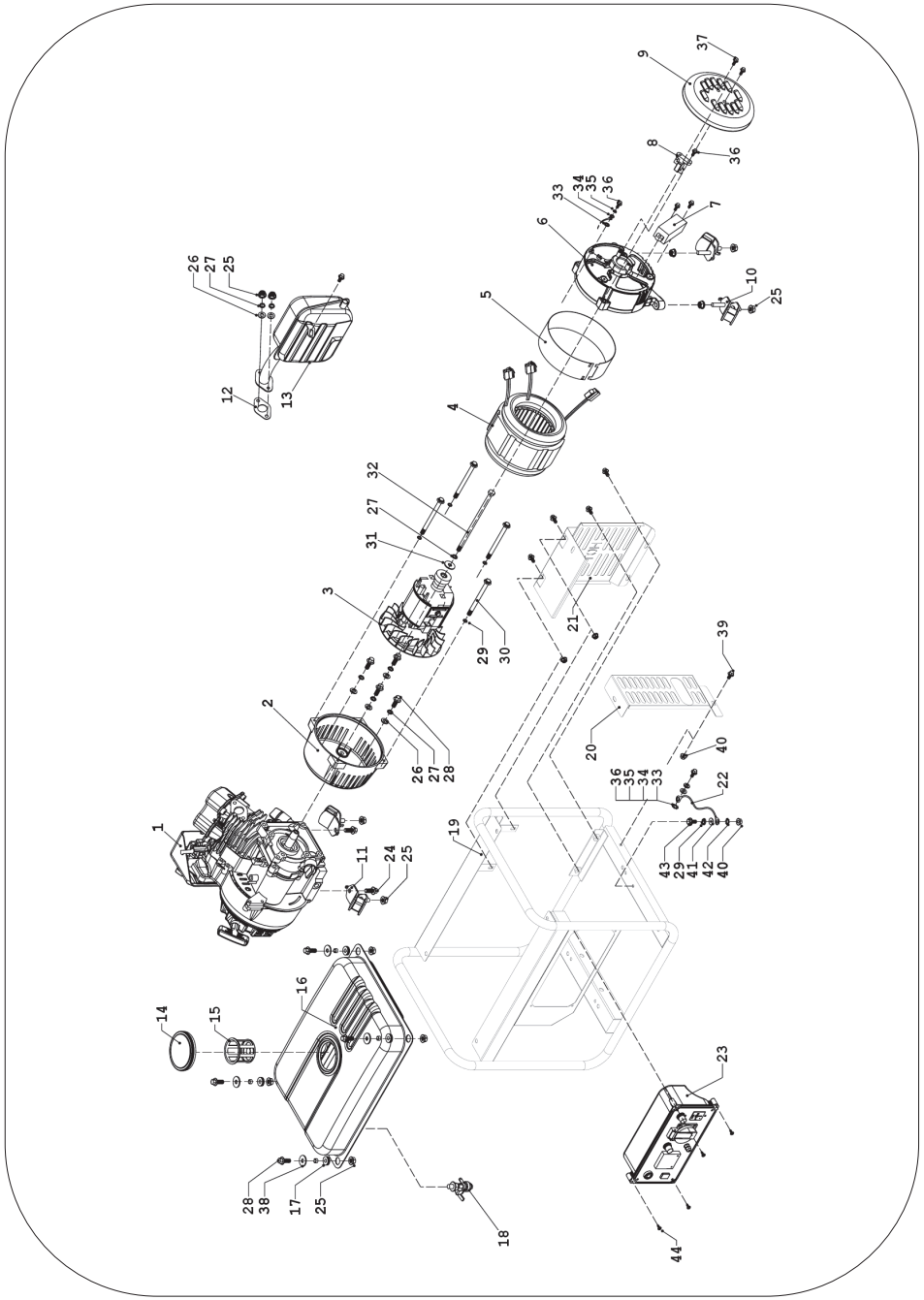

SAFETY INSTRUCTIONS….cont

company employee is working on an electrical line believing it to be "dead" and current created by the generator is in the line, shock or electrocution may occur.
The key to better safeguard against these dangers is professional installation by a qualified electrician and the installation of a generator transfer switch.
Keep in mind a generator burns fuel and must be run in a well ventilated area, it must not be run in a garage or other outbuilding.
Cords used to connect the generator to the lights and appliances must be correctly sized to prevent overheating or damage to the equipment as well, again if you are unsure ask a suitably qualified electrician.

GROUNDING INSTRUCTIONS

Earth / Ground Terminal

1. Use the ground terminal (see picture above) on the generator to connect the unit to a suitable ground source. Securely fasten the end terminal of the ground wire to the ground terminal on the generator.
2. The ground wire should be made of more than 0.75 square millimetre wire. Too thin wire may not provide an adequate ground path.
3. The other end of the ground wire must be securely fastened to an approved ground source. Refer to the local regulations for ground source information. If not sure of regulations or procedures, obtain assistance from a qualified (licensed or certified) electrical technician

CAUTION: The warnings and cautions mentioned in this user manual can not cover all possible conditions and situations that may occur. It must be understood by the operator that common sense and caution are factors which cannot be built into this product, but must be applied.

GUARANTEE

Guarantee:

This SIP generator is covered by a 12 month parts and labour warranty covering failure due to manufacturers defects. This does not cover failure due to misuse or operating the generator outside the scope of this manual - any claims deemed to be outside the scope of the warranty may be subject to charges Including, but not limited to parts, labour and carriage costs.

This guarantee does not cover consumables such as filters etc.

In the unlikely event of warranty claims, contact your distributor as soon as possible. Proof of purchase will be required before any warranty can be honoured.

Note: Proof of purchase will be required before any warranty can be honoured.

TECHNICAL SPECIFICATIONS

Name	**Medusa T1101**
Part number	**03955**
Engine type	4-stroke, single cylinder, air cooled, OHV
Engine size	2.4 HP
Fuel type	Unleaded petrol
Rated output (peak)	1100 watts
Rated output (continuous)	900 watts
AC voltage	230v ~50hz
DC voltage	12 v
DC current (max.)	5.8 amps
Fuel tank capacity	6 Litres
Sound power (LwA)	93 dB(A)

MAINTENANCE INSTRUCTIONS….cont

automatically.

3. Discharge the oil.
4. Remove the spark plug and fill the cylinder with 1 tablespoon of fresh oil. Pull the starting cord 3-4 times to discharge the remaining oil then reinstall the spark plug.
5. Pull the starting cord slowly until the resistance is strong, this indicates that the piston is moving to the top of the compression stoke and the valves will be closed.

WIRING DIAGRAM

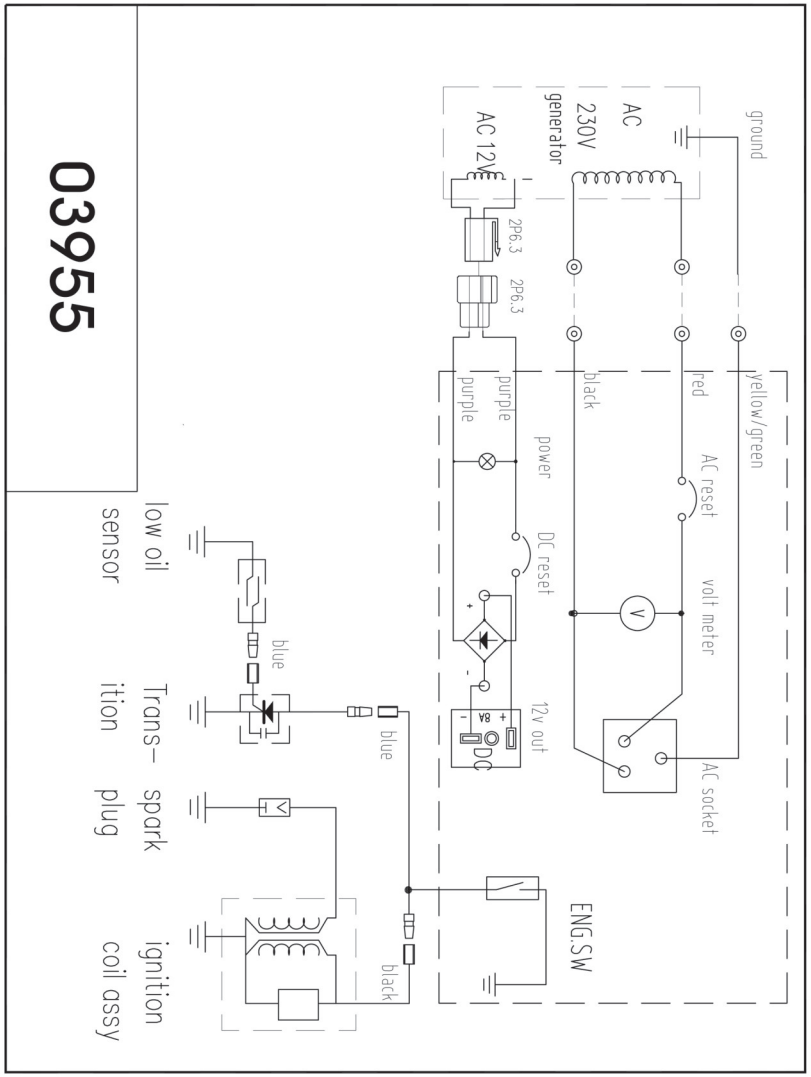

3. Remove the air filter element.
4. If the air filter is damaged contact your local distributor to purchase a replacement, If the filter is dirty wash the filter in a solution of warm water and mild detergent and rinse thoroughly. Leave the filter to dry completely, once dried immerse the filter in clean engine oil and squeeze the filter to remove excess oil - the filter should only be damp with oil.
5. Put the filter back into its original position and refit the air filter cover etc.

CLEAN OR REPLACE THE SPARK PLUG

Clean or Replace The Spark Plug (every 50 hours of use).

1. Remove the spark plug cap from the spark plug.
2. Use the supplied spark plug spanner to remove the spark plug.
3. Check for discoloration and remove any carbon build up.
4. Check the spark plug gap, it should be between 0.7 and 0.8mm; Adjust if necessary.
5. Check the overall condition of the plug and replace if damaged.
6. Reinstall the plug, spark plug cap and maintenance panel.

CHECK THE FUEL TANK FILTER

Check The Fuel Tank Filter (periodically).

Just under the fuel cap is a fuel filter, check this filter periodically and remove any contaminants which may have accumulated.
1. Remove the fuel tank cap and filter.
2. Clean the filter and, if damaged replace.
3. Insert the filter back into place.
4. Ensure the tank cap is tightly secured.

TRANSPORTATION AND STORAGE

To prevent fuel spillage when transporting or during temporary storage, the generator should be stored upright in its normal operating position, ideally with all of the fuel removed and with the engine switch off.

Long Term Storage (1 month or greater).

1. Be sure the storage area is free of excessive humidity and dust.
2. Completely drain the fuel from the tank. Open the fuel valve, start the engine and operate it in the idle position until all remaining fuel is used and the engine stops

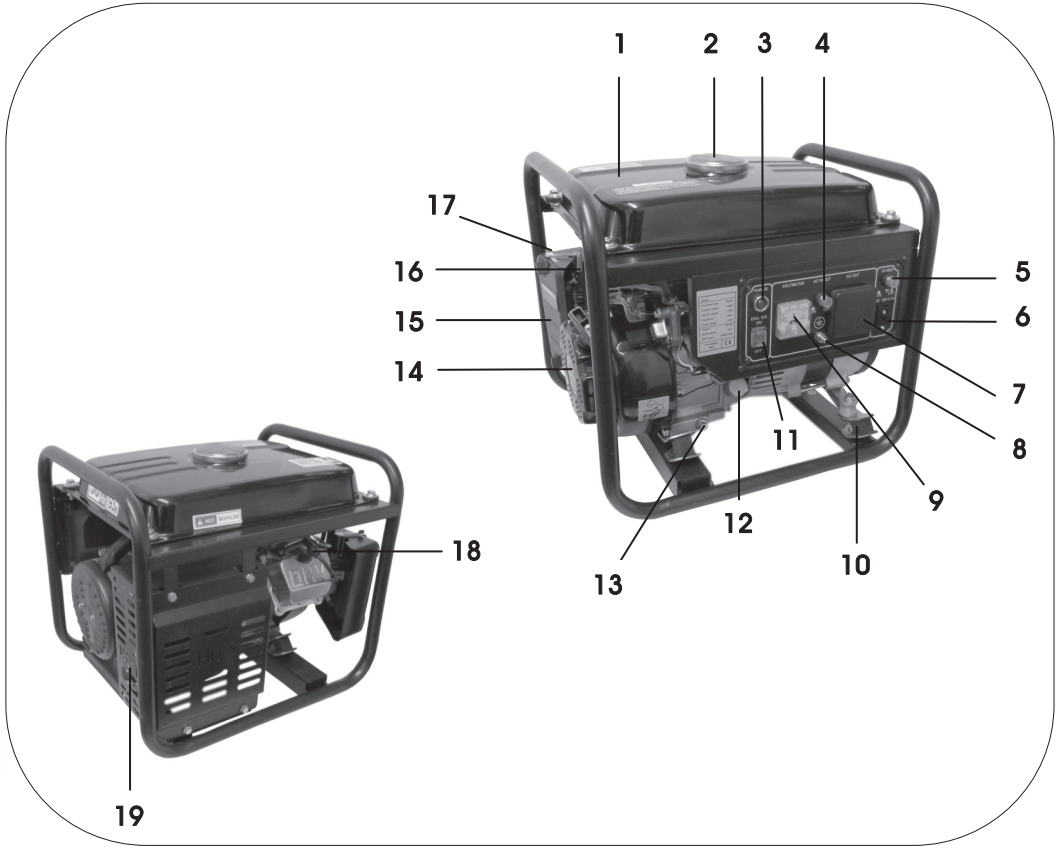

Ref. No.	Description	Ref. No.	Description
1.	Fuel Tank	11.	Engine On/Off Switch
2.	Fuel Cap	12.	Oil Filler / Dipstick
3.	Power Indicator	13.	Oil Drain Bung
4.	AC Circuit Breaker	14.	Recoil Starter
5.	DC Circuit Breaker	15.	Air Filter
6.	DC Socket	16.	Fuel Tap
7.	AC Socket	17.	Choke
8.	Earth / Ground Terminal	18.	Spark Plug
9.	Volt Meter	19.	Exhaust
10.	Anti-Vibration Mount		

OPERATING INSTRUCTIONS

Hot Surfaces: Always ensure that the generator is turned off and allowed to fully cool before any refuelling or maintenance procedures are carried out.

FILLING THE CRANKCASE WITH OIL / CHECKING THE OIL LEVEL

Caution: The generator is drained of oil at the factory prior to shipping. SAE 10W-30 oil or equivalent is recommended for these generators.

Note: When checking the oil level; always ensure that the generator is placed on a firm level surface.

Ensure that the generator is on a flat level surface.

- Remove the filler cap / Dipstick by turning it anti-clockwise.
- Slowly pour the oil into the crankcase.
- Check the oil level by pushing the filler cap back into its hole up to the bottom of the threads (do not screw the cap in).
- Once the oil level is between the upper and the lower marks on the oil gauge (see below), refit it and turn clockwise to fully tighten.

The oil level should be checked every 8 hours or daily.
The oil should be **changed** after the first 20 hours of operation; thereafter change the oil after 50 hours of operation or less if the generator is operated under constant heavy loads or in high ambient temperatures.

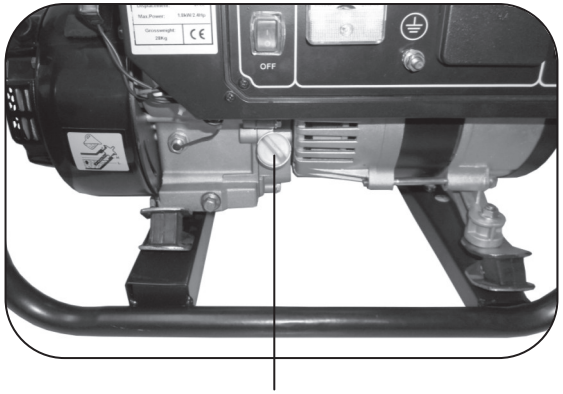

Oil Filler Cap / Dipstick

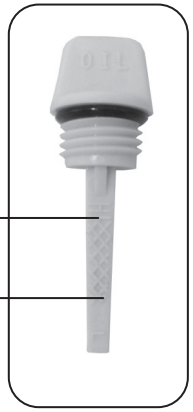

OPERATING INSTRUCTIONS….cont

Note: If the battery is too large for the generator, or if the battery is damaged it will attempt to take a load over that which the generator can give. The DC overload will then trip the output. If this happens, investigate the cause, wait a few minutes and reset the DC overload on the control panel.

STOPPING THE GENERATOR

In an emergency:

- Simply press the engine switch to the off position.

In normal conditions:

- Remove any load from the generator.
- Press the engine switch to the off position.
- Turn the fuel tap to off.

MAINTENANCE INSTRUCTIONS

Caution: Always turn off the generator and allow to fully cool before carrying out any maintenance procedures.

CHANGING THE OIL

Change The Engine Oil (every 50 hours of use).

1. Turn the oil filler cap counter clockwise and remove from the crankcase.
2. Loosen and remove the oil drain bung and allow the oil to drain into a suitable container.
3. Refit and tighten the oil drain bung once all of the oil has drained.
4. Fill the crankcase to the max level with fresh oil (see page 10); we recommend the use of SAE 10W-30 oil.
5. Refit the oil filler cap.

CLEAN OR REPLACE THE AIR FILTER

Clean or Replace The Air Filter (every 50 hours of use)

1. Remove the air filter cover screws.
2. Remove the air filter cover.

Note: Any device which contains an inductive load (e.g. devices that contain a motor) may require more current on start-up.

USING AC POWER

- Follow the instructions on page 12 to start the engine.
- Ensure that the device to be connected is turned off.
- Connect the device to the 230v AC socket.
- Proceed to use the device normally.

USING DC POWER

Note: The DC output on the generator is for charging batteries only - see specifications on page 8

Caution: Make connections to the battery only after starting the engine.

Caution: To reduce the possibility of creating a spark near the battery, connect the battery charging lead to the battery first and then to the generator.

- Connect the red wire to the positive terminal on the battery and the black wire to the negative terminal of the battery - ***NEVER REVERSE THE POLARITY!***
- Connect the opposite end of the charging lead to the DC outlet of the generator.
- If the battery has vent plugs, remove to allow ventilation.

Note: This not an intelligent battery charging system, therefore the battery condition should be closely monitored regularly during charging.

ON COMPLETION OF THE CHARGING PROCESS

- Unplug the lead from generator.
- Disconnect Negative clamp, then Positive clamp from the battery terminals.
- Turn off the generator (see page 15 "Stopping The Generator").

Caution: Ensure the oil level is maintained; Failure to do so will invalidate any warranty you may have.

FILLING THE GENERATOR WITH FUEL

Flammable: The fuel used to run this generator (unleaded petrol) is highly flammable. Never re-fuel the generator whilst it is running. Do not re-fuel near naked flames or other possible ignition sources.

Note: Never overfill the fuel tank; leave a small air gap at the top.
Fuel capacity: 6 Litres.

Note: When re-fuelling always ensure that the fuel filter (supplied) is in place under the filler cap, as foreign matter or debris will cause damage to the engine and greatly reduce the life of the generator.

To Fuel / re-fuel the generator:

1. Remove the fuel cap.
2. Carefully pour the petrol into the tank to the desired level and refit the fuel cap.
3. Remove any spilt fuel from the generator and surrounding area to avoid any risk of fire.

The generator should now be ready to run.

STARTING THE ENGINE

Caution: Never start the engine with any load connected to the generator.

Step 1:

⇒ Turn the main engine switch to the on (1) position.

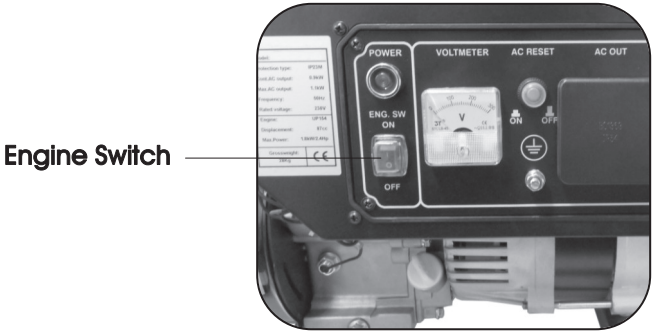

Step 2:

⇒ Turn the fuel tap to the on position (see below, right).

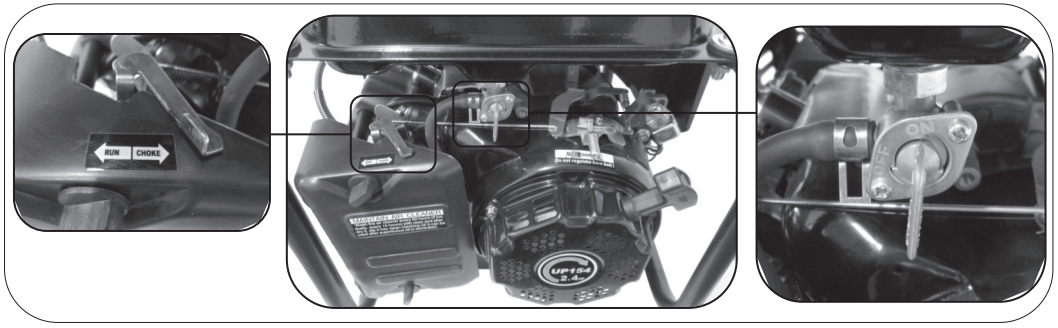

Step 3:

⇒ Slide the choke lever to the right (see above, left).

Note: The choke may not be needed if the engine is already warm or the ambient temperature is hot.

Step 4:

⇒ Hold the generator firmly with one hand.

⇒ Grip the recoil start handle and slowly pull the cord until it engages, then pull sharply until the engine starts.

Note: It may take a few sharp pulls to get the engine started.

Note: Once the engine has started slowly release the recoil and allow the cord to be retracted.

Step 5:

⇒ Once the engine is running and warm enough, slide the choke lever to the left 'RUN' position.

Note: Allow the engine to run with no load applied for a few minutes to allow the engine to come up to running temperature.

Note: The power indicator light (green) will be on, and remain on during normal operation.

CONNECTING ELECTRICAL DEVICES

The generator can supply 230v AC and 12v DC (only to be used for charging batteries).

Caution: Ensure that the device to be connected is in good working order and that the required power needed to run it is within those stated in the specifications for the generator.